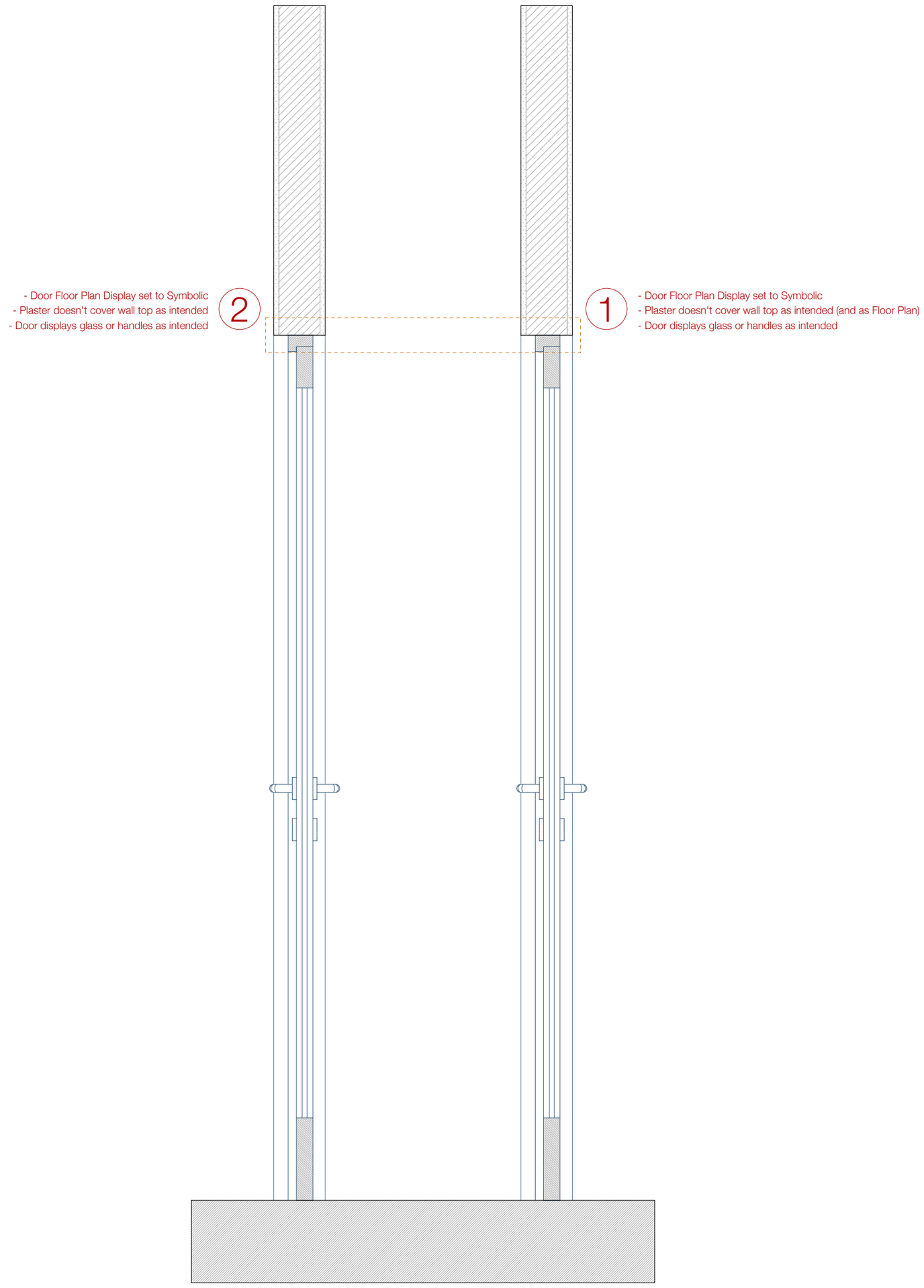

Section View

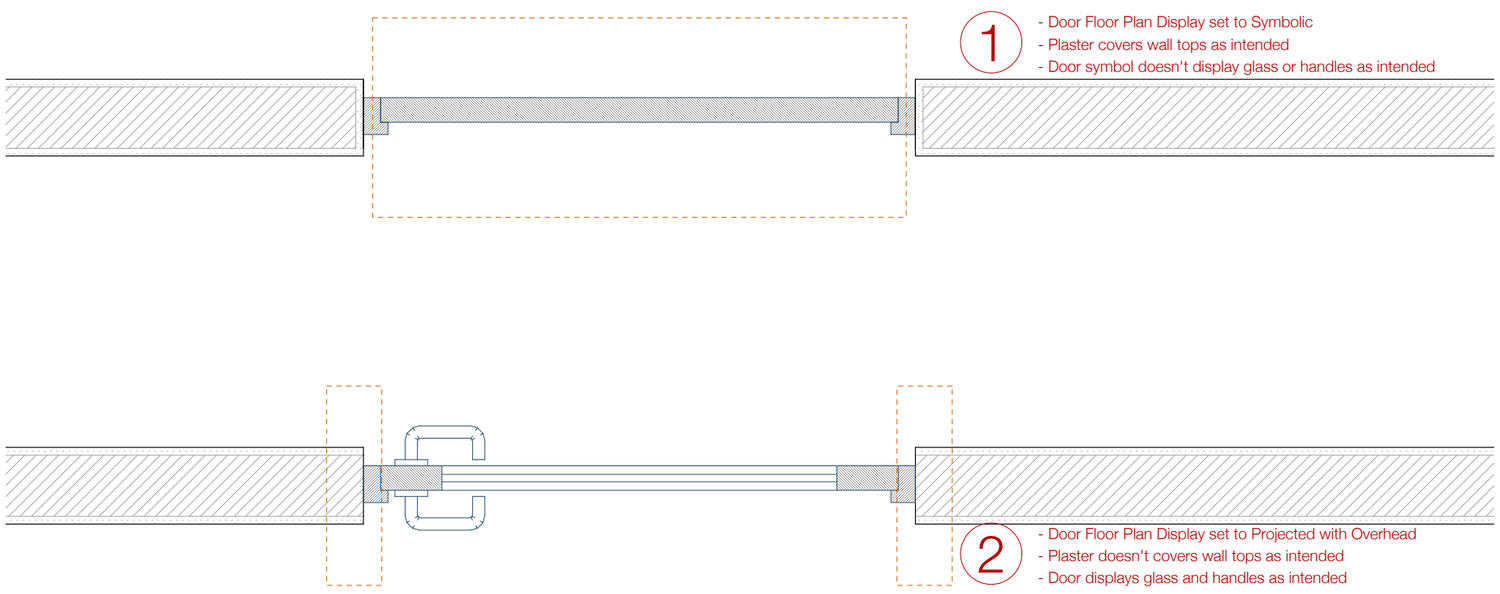

Floor Plan View